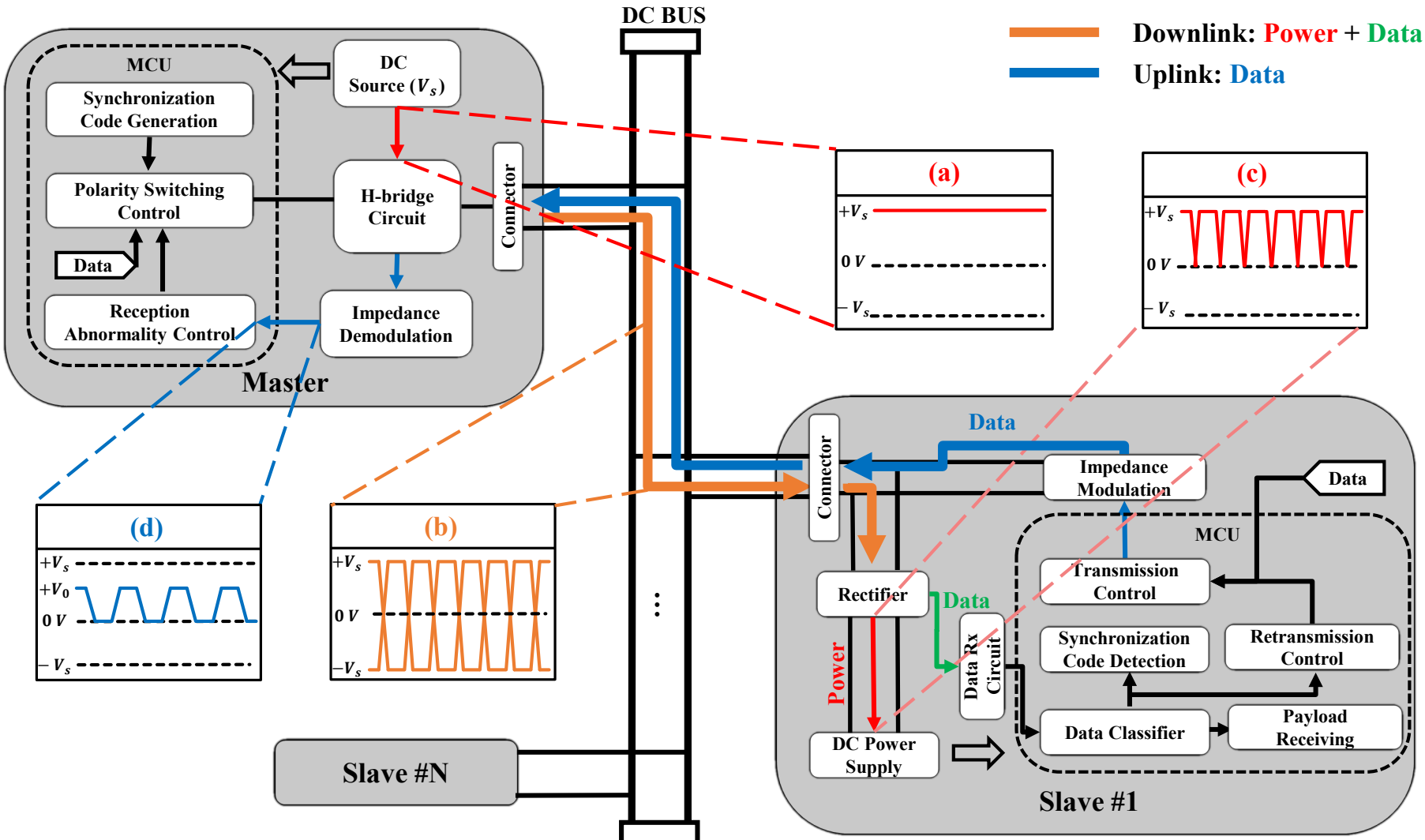
DC BUS
Downlink: Power + Data
Uplink: Data
MCU
Synchronization Code Generation
Polarity Switching Control
Data
Reception Abnormality Control
DC Source ($V_s$)
H-bridge Circuit
Impedance Demodulation
Connector
Master
(a)
$+V_s$
0 V
$-V_s$
(c)
$+V_s$
0 V
$-V_s$
(d)
$+V_s$
$+V_0$
0 V
$-V_s$
(b)
$+V_s$
0 V
$-V_s$
Slave #N
Connector
Data
Impedance Modulation
Data
MCU
Transmission Control
Rectifier
Data
Power
Data Rx Circuit
Synchronization Code Detection
Retransmission Control
DC Power Supply
Data Classifier
Payload Receiving
Slave #1